PARTS LIST

ND-6HS(X)

525864

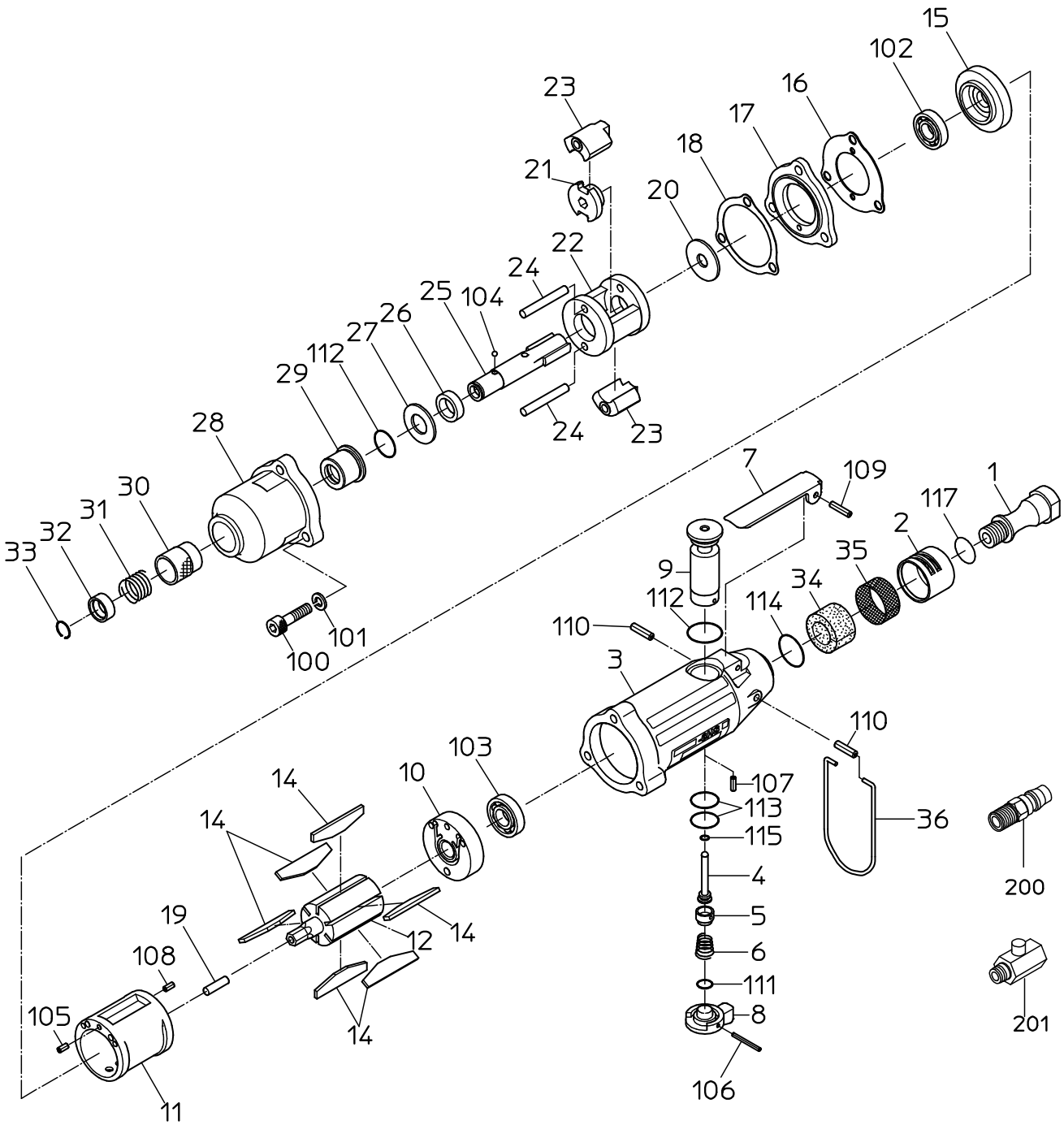

日本ニューマチック工業株式会社

NIPPON PNEUMATIC MFG. CO., LTD.

パーツリスト　PARTS LIST

型式 MODEL: **ND-6HS(X)**　525864

符号 ITEM	品番 PART NO.	品名	PART NAME	個数 Q'ty
1	15212630	ｲﾝﾚｯﾄﾌﾞｯｼｭ	INLET BUSHING	1
2	15212620	ｴｷｿﾞｽﾄｶﾊﾞｰ	EXHAUST COVER	1
3	単品販売不可	ﾊﾝﾄﾞﾙ	HANDLE	1
4	15303490	ｽﾛｯﾄﾙﾊﾞﾙﾌﾞ	THROTTLE VALVE	1
5	15303480	ｽﾛｯﾄﾙｷｬｯﾌﾟ	THROTTLE CAP	1
6	15213230	ｽﾛｯﾄﾙｽﾌﾟﾘﾝｸﾞ	THROTTLE SPRING	1
7	15213271	ﾚﾊﾞｰ	LEVER	1
8	15213260	ﾘﾊﾞｰｽﾚﾊﾞｰ	REVERSE LEVER	1
9	15213250	ﾘﾊﾞｰｽﾊﾞﾙﾌﾞ	REVERSE VALVE	1
10	単品販売不可	ﾄｯﾌﾟﾌﾟﾚｰﾄ	ﾄｯﾌﾟﾌﾟﾚｰﾄWBRにて販売	1
11	15219997	ｼﾘﾝﾀﾞ	CYLINDER	1
12	15212880	ﾛｰﾀ	ROTOR	1
14	15219945	ﾍﾞｰﾝ	VANE	6
15	単品販売不可	ﾎﾞｯﾀﾑﾌﾟﾚｰﾄ	ﾎﾞｯﾀﾑﾌﾟﾚｰﾄWBRにて販売	1
16	15212820	ﾄｯﾌﾟｼｰﾙ	TOP SEAL	1
17	15212910	ｶﾗｰ	COLLAR	1
18	15212830	ﾎﾞｯﾀﾑｼｰﾙ	BOTTOM SEAL	1
19	15219498	ﾛｰﾀﾋﾟﾝ	ROTOR PIN	1
20	15212750	ｽﾍﾟｰｻ	SPACER	1
21	15212760	ﾄﾞﾗｲﾊﾞ	DRIVER	1
22	15219501	ﾊﾝﾏﾌﾚｰﾑ	HAMMER FRAME	1
23	15212790	ﾊﾝﾏ	HAMMER	2
24	15219913	ﾊﾝﾏﾋﾟﾝ	HAMMER PIN	2
25	15217060	ｱﾝﾋﾞﾙ	ANVIL	1
26	15212730	ｱﾝﾋﾞﾙﾌﾞｯｼｭ	ANVIL BUSH	1
27	15216380	ｽﾗｽﾄﾜｯｼｬ	THRUST WASHER	1
28	単品販売不可	ﾊﾝﾏｹｰｽ	ﾊﾝﾏｹｰｽCPにて販売	1
29	15212780	ｹｰｽﾌﾞｯｼｭ	CASE BUSH	1
30	15217090	ﾎﾞｰﾙﾎﾙﾀﾞ	BALL HOLDER	1
31	15216560	ﾌﾟｯｼｭｽﾌﾟﾘﾝｸﾞ	PUSH SPRING	1
32	15217080	ｽﾄｯﾊﾟﾜｯｼｬ	STOPPER WASHER	1
33	15216690	ｽﾄｯﾊﾟﾘﾝｸﾞ	STOPPER RING	1
34	15212920	ﾏﾌﾗ	MUFFLER	1
35	15213010	ｽｸﾘｰﾝ	SCREEN	1
36	15216180	ﾊﾝｶﾞ	HANGER	1
100	74005022	ｷｬｯﾌﾟｽｸﾘｭ	CAP SCREW	3
101	76420105	ｽﾌﾟﾘﾝｸﾞﾜｯｼｬ	SPRING WASHER	3
102	28201023	ﾎﾞｰﾙﾍﾞｱﾘﾝｸﾞ	BALL BEARING	1
103	28201055	ﾎﾞｰﾙﾍﾞｱﾘﾝｸﾞ	BALL BEARING	1
104	28205023	ｽﾁｰﾙﾎﾞｰﾙ	STEEL BALL	1
105	25305560	ｽﾌﾟﾘﾝｸﾞﾋﾟﾝ	SPRING PIN	1
106	28208030	ｽﾌﾟﾘﾝｸﾞﾋﾟﾝ	SPRING PIN	1
107	28208054	ｽﾌﾟﾘﾝｸﾞﾋﾟﾝ	SPRING PIN	1
108	28208056	ｽﾌﾟﾘﾝｸﾞﾋﾟﾝ	SPRING PIN	1
109	28208064	ｽﾌﾟﾘﾝｸﾞﾋﾟﾝ	SPRING PIN	1
110	28208098	ｽﾌﾟﾘﾝｸﾞﾋﾟﾝ	SPRING PIN	2
111	61200090	Oﾘﾝｸﾞ	O RING	1
112	61200120	Oﾘﾝｸﾞ	O RING	2
113	61200160	Oﾘﾝｸﾞ	O RING	2
114	61200200	Oﾘﾝｸﾞ	O RING	1
115	63200050	Oﾘﾝｸﾞ	O RING	1
117	63200160	Oﾘﾝｸﾞ	O RING	1
200	24901010	ｶﾌﾟﾗﾌﾟﾗｸﾞ	COUPLER PLUG	1
201	24999065	ﾊﾟﾜｰﾚｷﾞｭﾚｰﾀ	POWER REGULATOR	1

パーツリスト　PARTS LIST

型式 MODEL: **ND-6HS(X)** 525864

符号 ITEM	品番 PART NO.	品名	PART NAME	個数 Q'ty
	CP リスト			
	15220042	ﾊﾝﾄﾞﾙCP	HANDLE CP	
		1,2,3,4,5,6,7,8,9,34,35,106,107,109,110,111,112,113		
		114,115,117		
	15219345	ﾊﾝﾏｹｰｽCP	HAMMER CASE CP	
		28,29,112		
	15219360	ﾄｯﾌﾟﾌﾟﾚｰﾄWBR	TOP PLATE WBR	
		10103		
	15219396	ﾎﾞｯﾀﾑﾌﾟﾚｰﾄWBR	BOTTOM PLATE WBR	
		15102		
	15219800	ﾊﾝﾏｹｰｽWB	HAMMER CASE WB	
		28,29		