PARTS LIST

NNK-750

605584

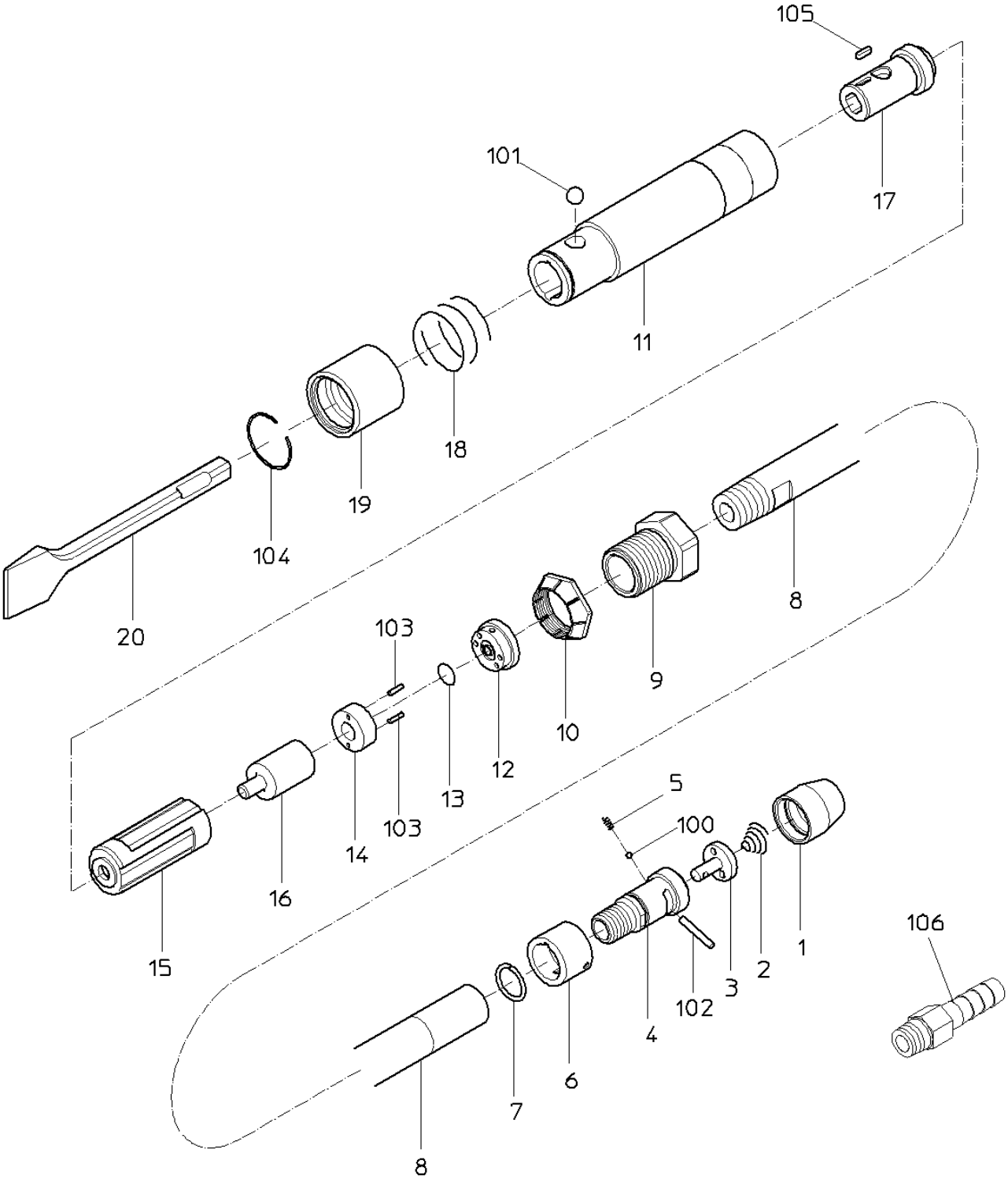

NIPPON PNEUMATIC MFG. CO., LTD.

PARTS LIST

MODEL: **NNK-750** 605584

ITEM	PART NO.	PART NAME	Q'ty
1	15100940	INLET BUSHING	1
2	15100930	THROTTLE SPRING	1
3	17510470	THROTTLE VALVE	1
4	17510460	THROTTLE ARBOR	1
5	15007650	STOPPER BALL SPRING	1
6	17510440	GRIPE	1
7	17510450	GRIP RING	1
8	17514549	PIPE	1
9	17510120	LOCK SCREW	1
10	17510020	LOCK NUT	1
11	Not available separately. Available only as LINE CASE CP (P/No.17514942)	LINER CASE	1
12	17509950	TOP VALVE SHEET	1
13	17509960	VALVE	1
14	17509970	BOTTOM VALVE SHEET	1
15	Not available separately. Available only as LINE CASE CP (P/No.17514942)	LINER	1
16	17509870	PISTON	1
17	Not available separately. Available only as LINE CASE CP (P/No.17514942)	SQUARE BUSH	1
18	17509850	PUSH SPRING	1
19	17510010	BALL HOLDER	1
20	17510080	CHISEL	1
100	25502120	STEEL BALL	1
101	25502040	STEEL BALL	1
102	28206061	PIN	1
103	28210015	PIN	2
104	25307907	RETAINING RING	1
105	28209070	KEY	1
	ASSY LIST		
	17514942	LINER CASE CP	
	11,15,17,105		
	17514497	THROTTLE ARBOR CP	
	1,2,3,4,5,6,7,100,102		
	17514735	VALVE CP	
	12,13,14,103		